Division of Renaissance Services Inc.

Dan Z. Sokol

Shawn Franks

Rapid & Affordable Castings from 3D-Printed Ceramic Molds

ICI Annual Conference
October 2020

Outline/Agenda

- **Introduction to PERFECT-3D and HTCI**
- **Casting Industry Challenge**
- **3D-Printed Ceramic Molds**
- **Ceramic 3D-Printing**
- **Throttle Body Case Study**
- **Summary and Q&A**

Introduction to PERFECT-3D and HTCI

Renaissance Services, PERFECT-3D Division

Partnered with PCC, one of the largest aerospace investment casting companies, to provide rapid ceramic tooling

Supported BASF, one of the largest chemical companies, in development of materials for 3D printing of ceramics

Partnered with Pratt & Whitney to provide 3D-printed ceramic molds and cores

Funded by the US Air Force to develop methods for providing replacement castings for out-of-production planes & engines

Conducted cooperative research with Lawrence Livermore National Labs to develop ceramic 3D printing processes

PERFECT-3D Tooling from Ceramic 3D-Printing

Cores

Molds

Filters

Focus is 3D-printed ceramic components to support investment casting

HTCI Company

A Registered AS9100 and ISO9001
Supplier of Aluminum Aerospace & Automotive Castings

12170 Milton-Carlisle Rd.
New Carlisle, Ohio 45344
www.htc-inc.com 937-845-1204

HTCI Processes

- **Investment Casting**
- **Plaster Mold**
- **Precision Sand Mold**
- **Rapid Prototyping**

- **NDT Inspection**
  - **Radiographic Inspection**
  - **Penetrant Inspection**
- **Mechanical Testing**
  - **Pressure/Leak Testing**
  - **Tensile Testing**

Example HTCI Castings

Casting Industry Challenge

Metal Additive Manufacturing

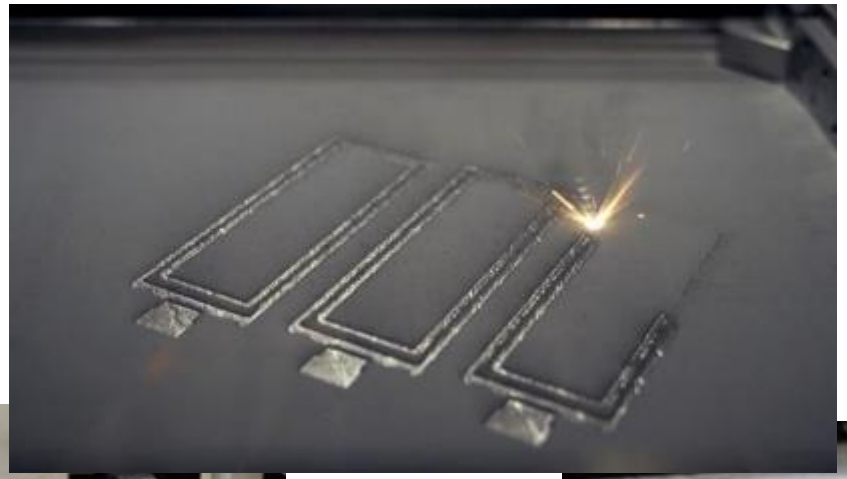

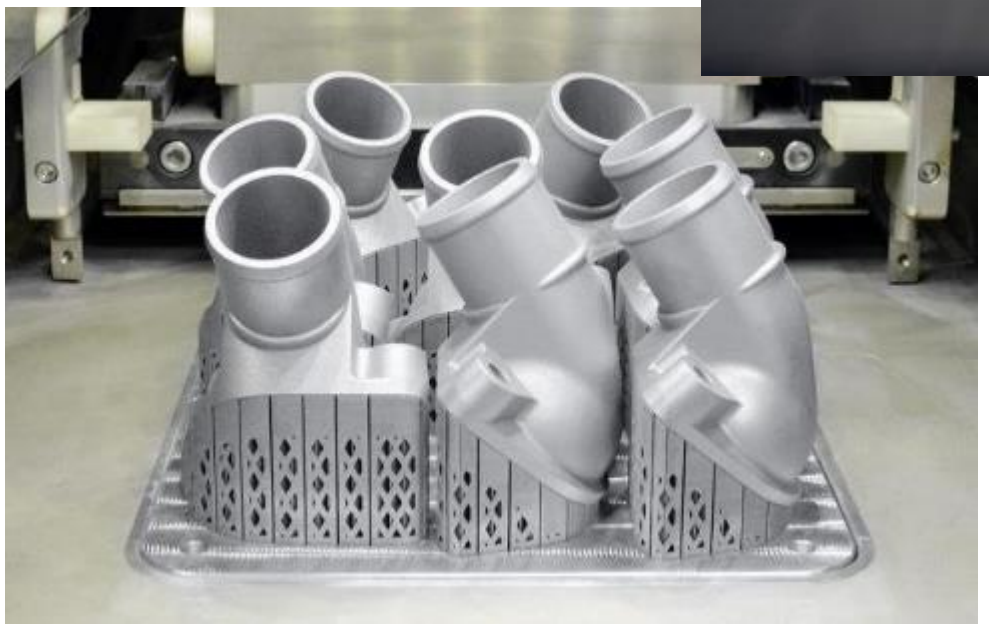

Metal Additive Manufacturing

- **“Using 3D printing instead of investment casting allows processing to occur radically differently, with reduced manufacturing steps and minimum processing waste” – Nature, May 11, 2020**

- **“Metal additive manufacturing gives us rapid design iterations – months versus years” – Forbes, August 20, 2020**

- **“Many of the components used in the SpaceX rocket engines were direct metal 3D-printed. It’s become a standard method of producing highly optimized, complex components.” – MSC, February 4, 2020**

Metal Additive vs Investment Casting

	Metal Additive	Investment Casting
Lead Times		Longer Wait
Tooling Cost		More Expensive
Material Cost	More Expensive	
Mechanical Properties	Less Predictable	

The Challenges is Providing Quicker Response Times and Lower Tooling Costs

3D-Printed Ceramic Molds

Why 3D-Printed Ceramic Molds?

1. Improve yield for part designs that challenge the dipping of traditional 3D-printed patterns

2. Reduce cost and lead time by skipping the standard dipping and dewaxing operations

3. Produce castings from ceramic core-mold combos that can't be made with traditional methods

Provide capabilities not available via traditional investment casting processes

Traditional Investment Casting Flow

Machining Pattern Die

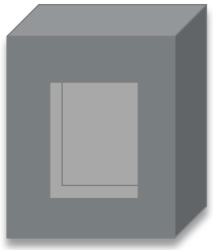

Injecting Wax Patterns

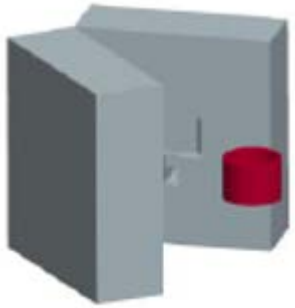

Assembling Wax Mold Tree

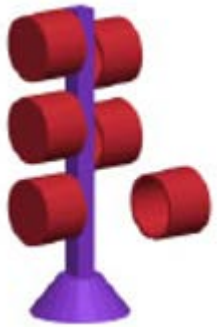

Coating with Slurry

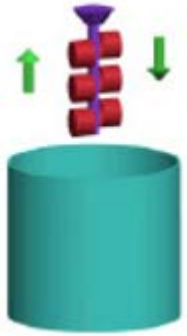

Coating with Ceramic

Melting Out Wax

Firing Ceramic Mold Tree

Pouring Metal Into Mold Tree

Removing Ceramic Mold

Cleaning the Castings

Investment Casting with 3D-Printed Molds

3D Print Ceramic Mold

Pouring Metal Into Mold Tree

Removing Ceramic Mold

Cleaning the Castings

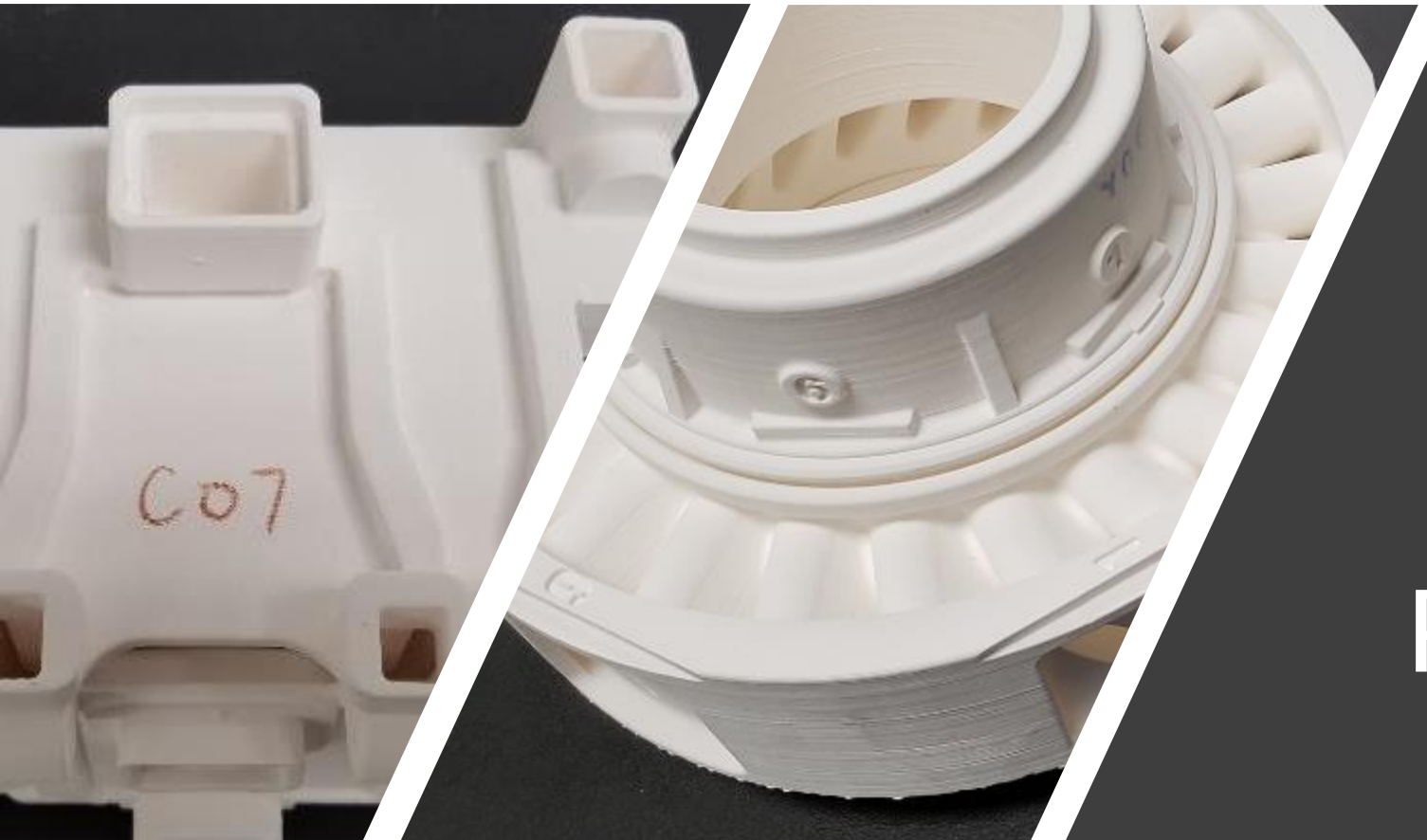

PERFECT-3D Example 3D-Printed Molds

PERFECT-3D Approach for 3D-Printed Molds

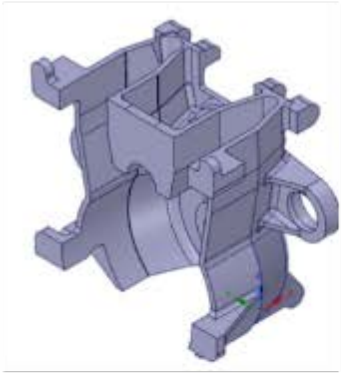

Cast Part
Model Definition

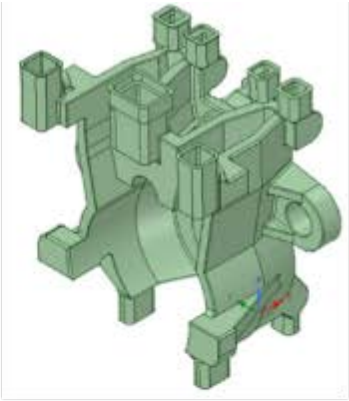

Create Basic Mold
Design

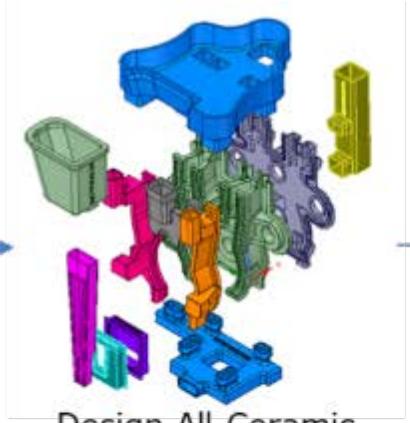

Design All Ceramic
Components for Mold

3D Print All Ceramic
Components

Post-Process Ceramic
Components

Assemble
Components into Mold

Ceramic Mold Ready
for Pouring

Finished
Casting

3D-Printed Combo Core-Molds for Airfoils

3D-Printed Ceramic Combo Core-Molds for Airfoils

Core-Lock Pins as Cooling Holes

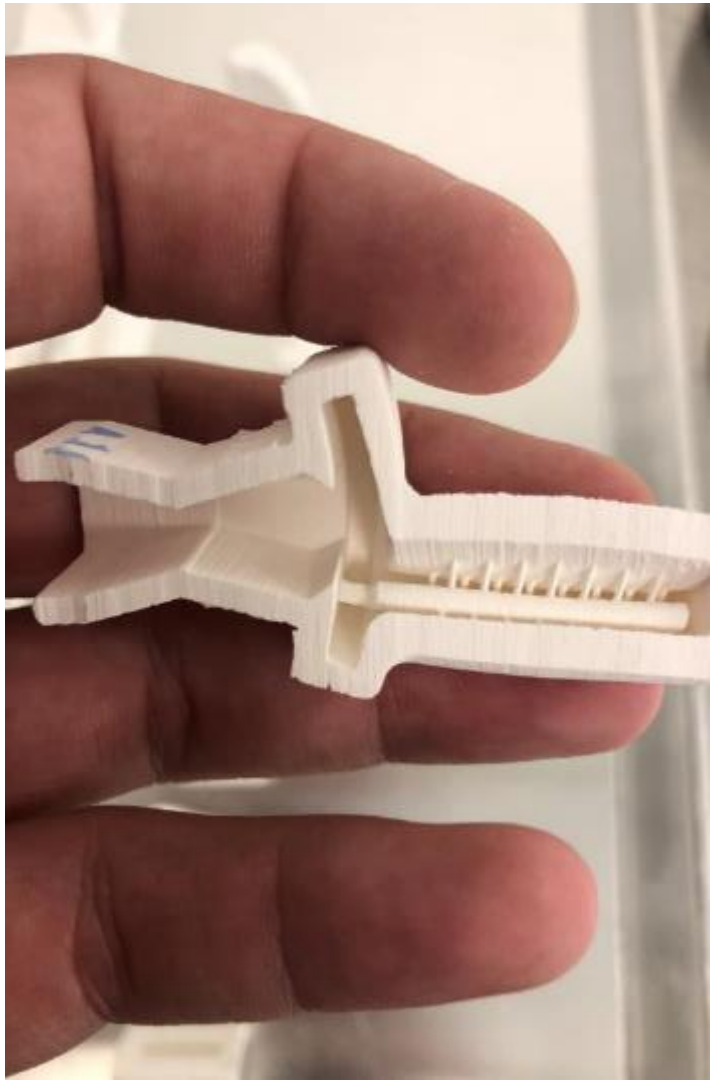

Airfoils with Cast-In Cooling Holes

3D-printing of combo core-molds is the key enabler for this long-desired capability in cooling of airfoils

Ceramic 3D-printing also enables shells with selective areas of porosity and thermal properties

3D-printing of ceramics provides many more advancements for complex casting designs

Applicability Based on Quantity/Complexity

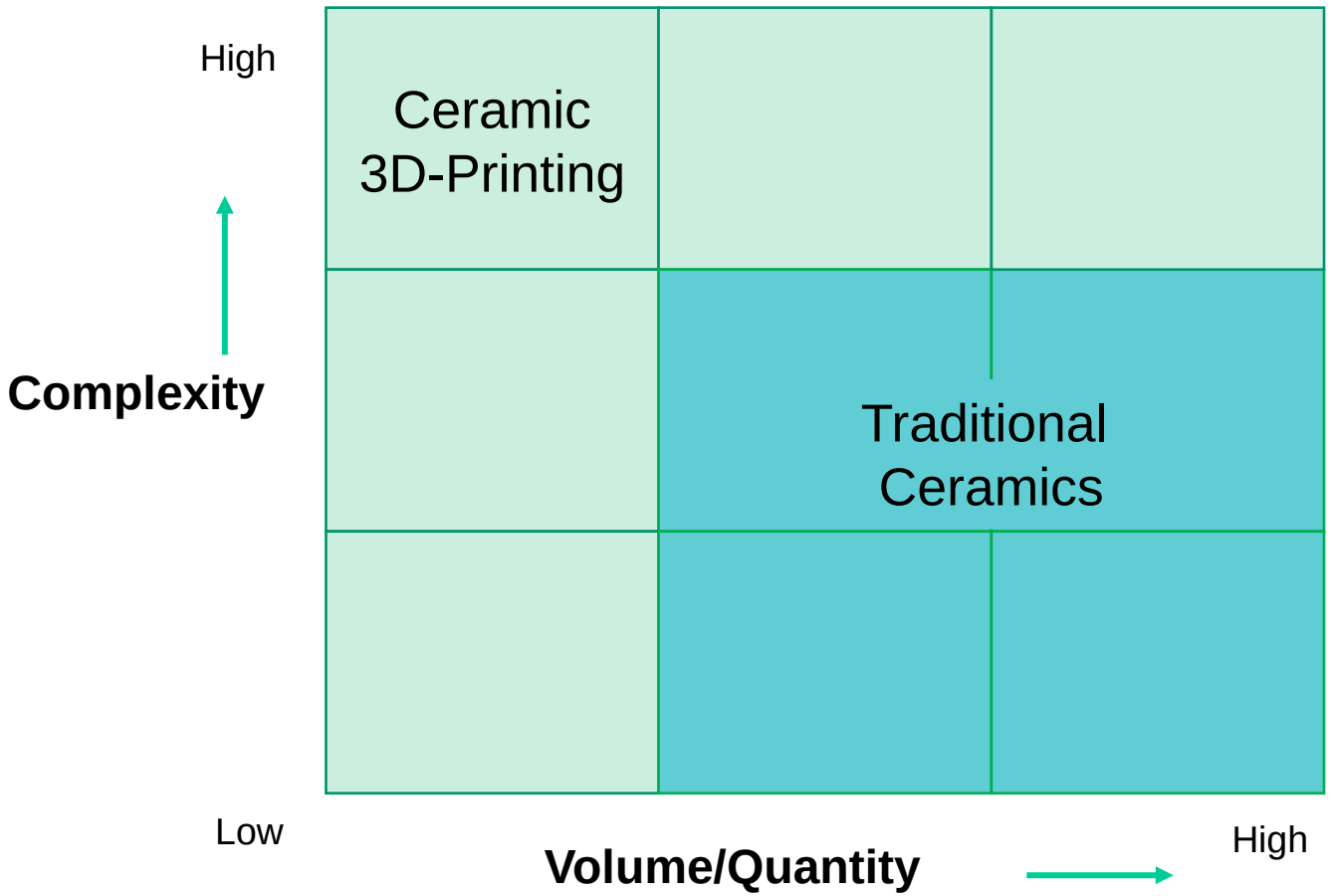

Ceramic 3D-Printing

Vat Photopolymerization 3D Printer

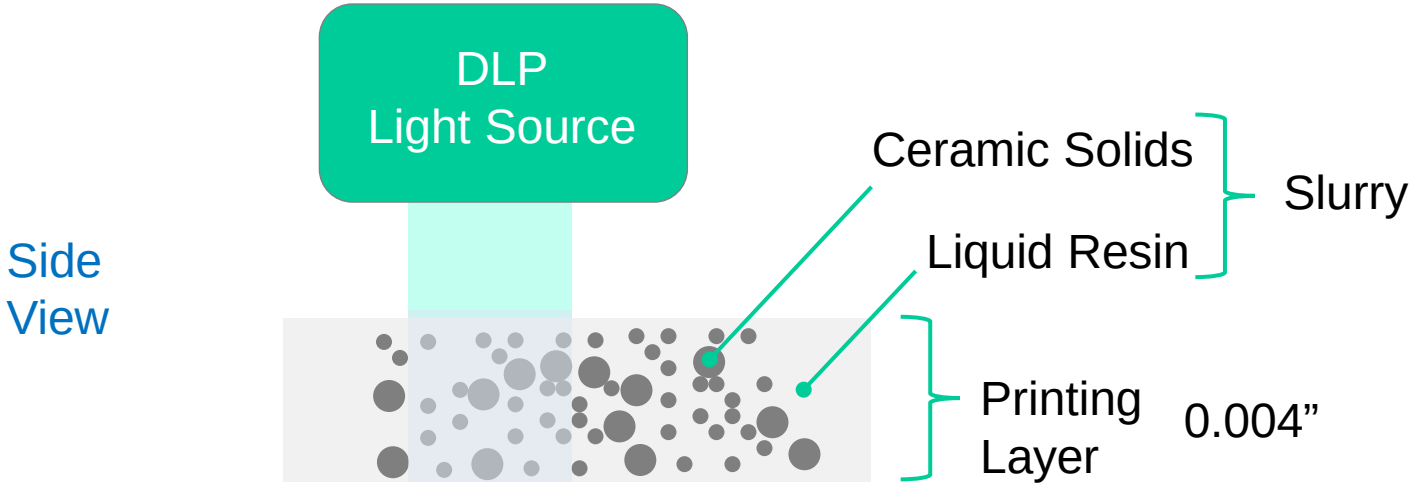

UV light causes resin to harden in layer

Getting Ready to Share Some of the Secrets of Ceramic 3D-Printing

Vat Photopolymerization 3D Printer

Side View

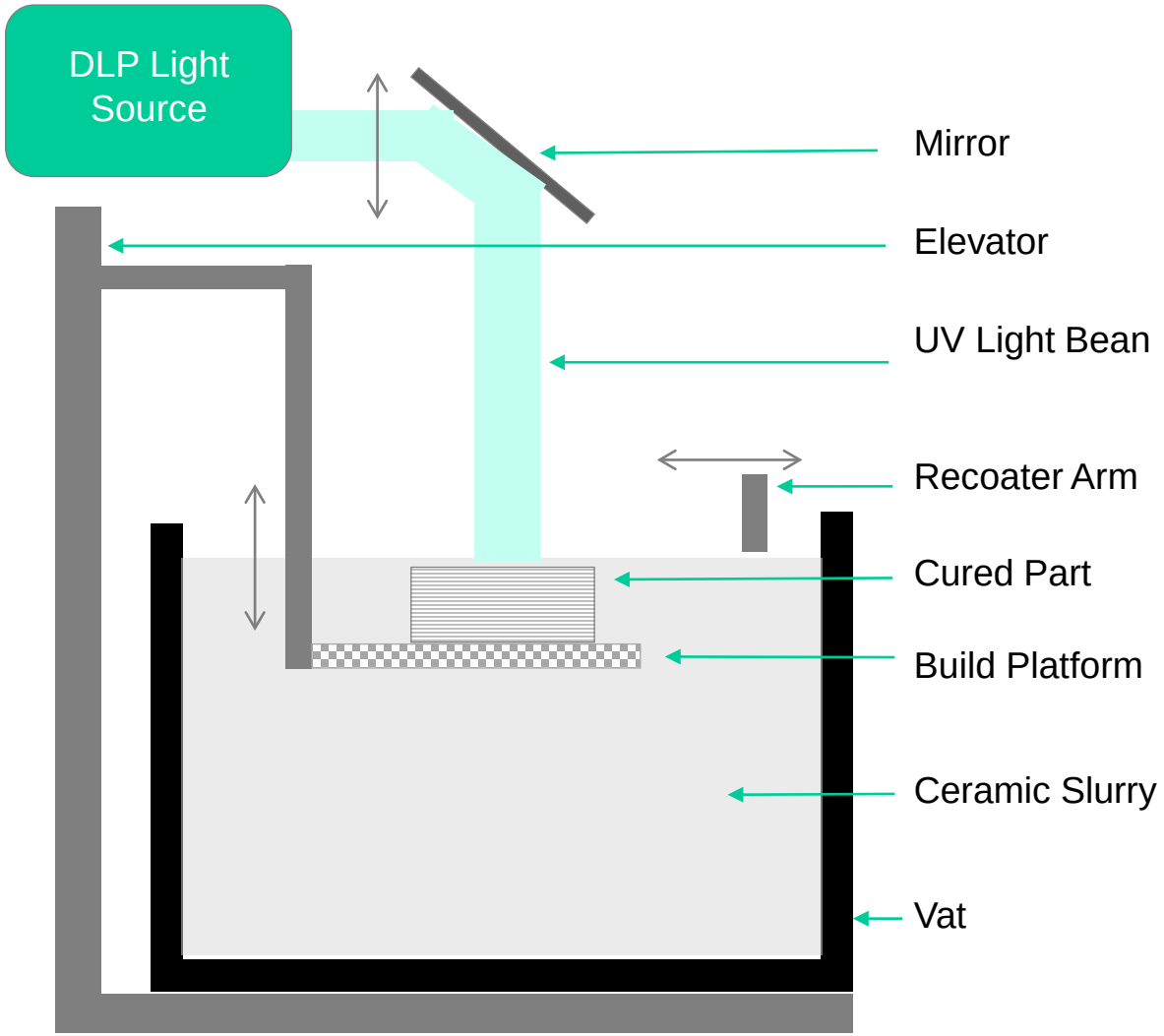

3D Printer

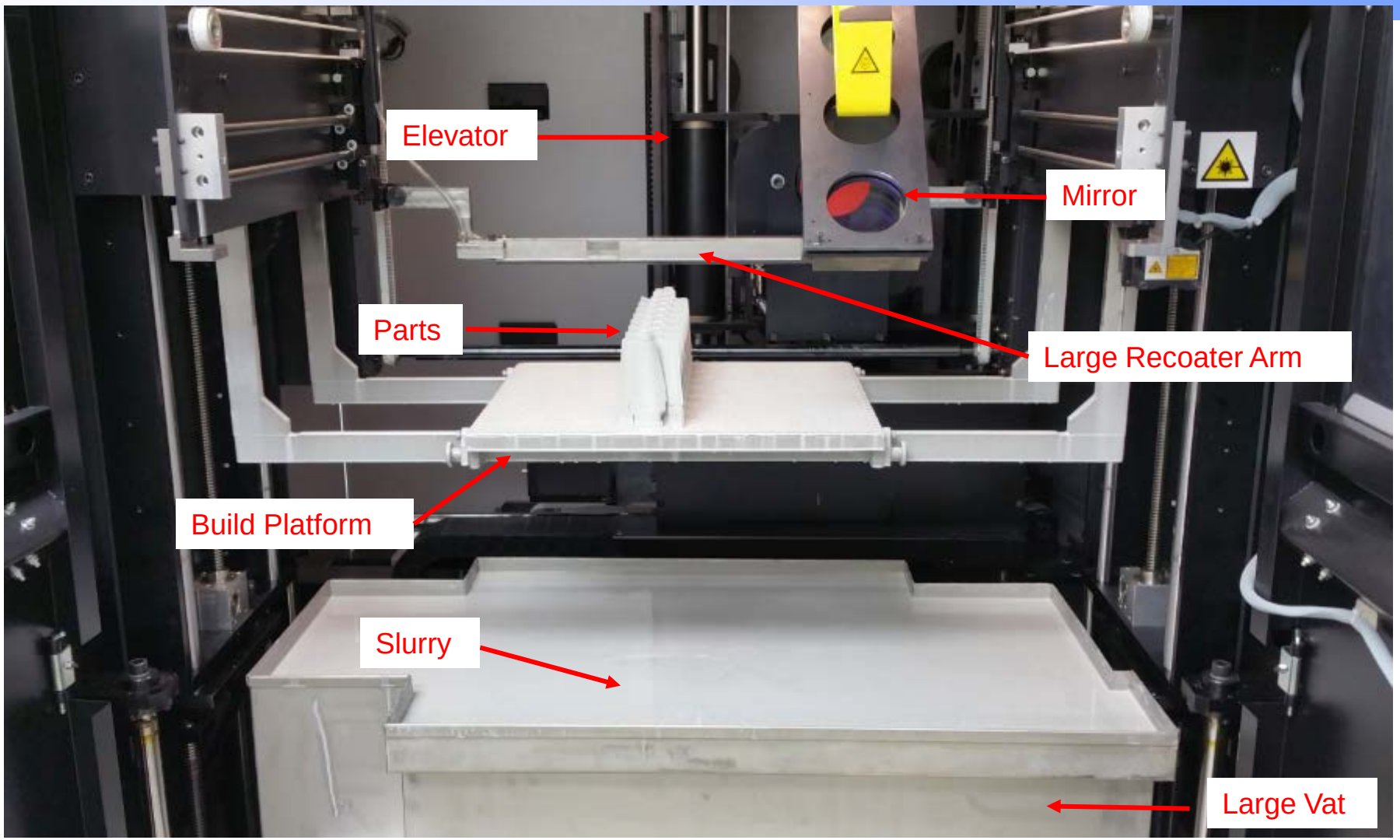
Elevator
Mirror
Parts
Large Recoater Arm
Build Platform
Slurry
Large Vat

Ceramic 3D Printing - Generic Process Flow

Designing → Mixing → Printing → Cleaning → Finishing → Firing → Inspecting

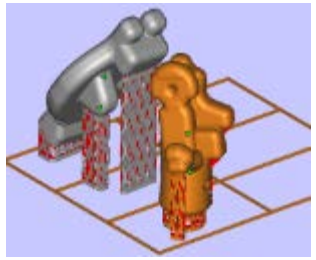

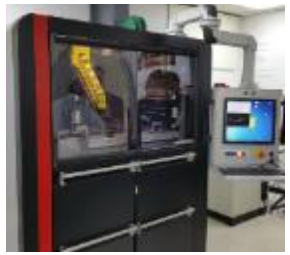



Ceramic Additive Manufacturing

Designing Cores, Molds, Filters for 3D Printing Process

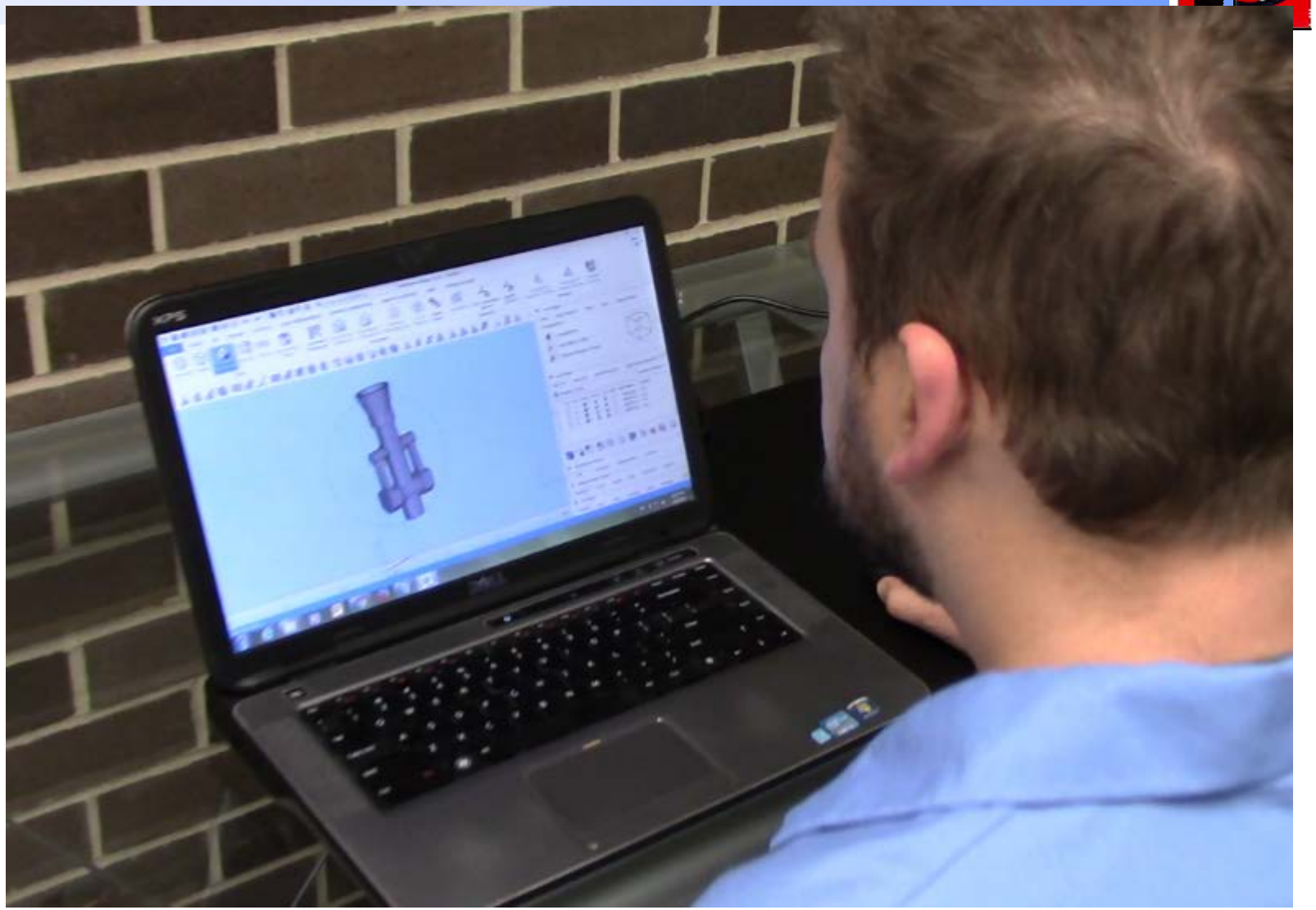

Ceramic Additive Manufacturing

Mixing Special Materials for Ceramic Slurry Made for 3D-Printing

Ceramic Additive Manufacturing

3D-Printing the Ceramic Components

Cleaning the 3D-Printed Ceramic Components

Firing the Ceramic Components for Investment Casting

Performing 3D Inspection on the Ceramic Components

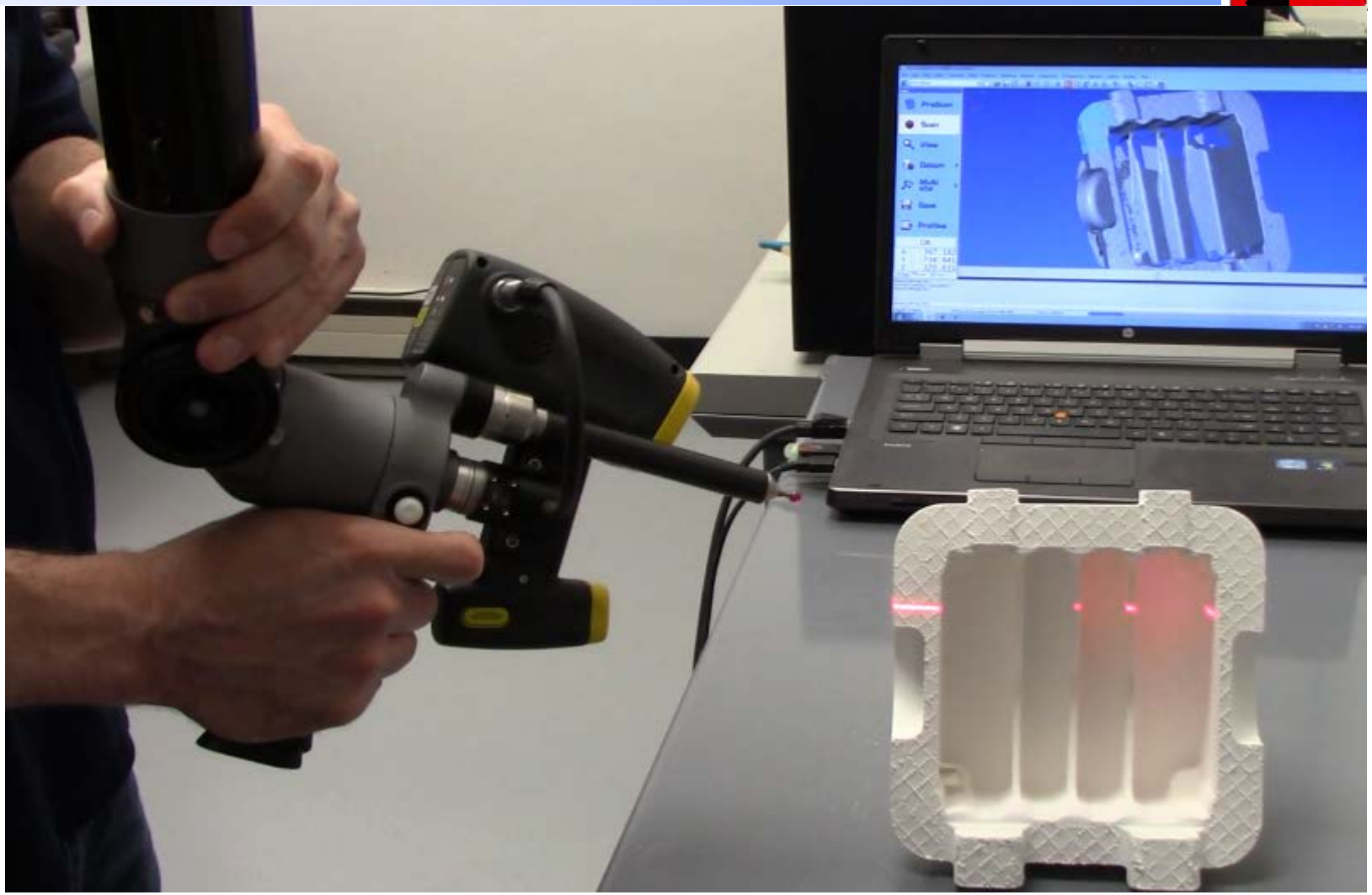

Throttle Body Case Study

Case Study Overview

HTCI Customer - Automotive After-Market Throttle Body

Very Small Quantity Production

Aluminum Alloy

Castings Needed in Weeks

Machined Model To Casting Model

Finished Part Model

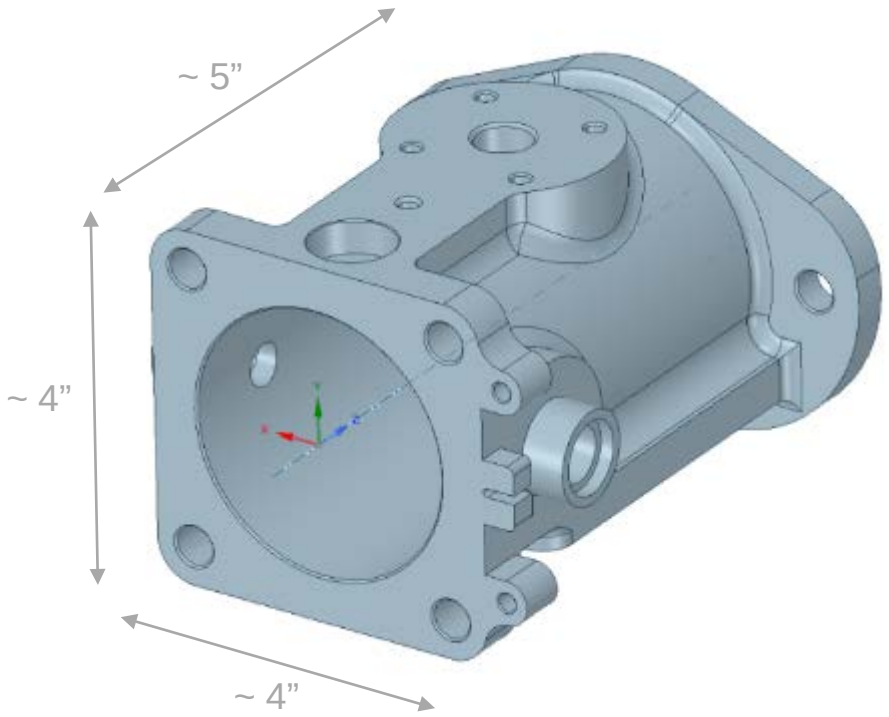

Added Machining Allowances

Filled Most of the Holes

Casting Model

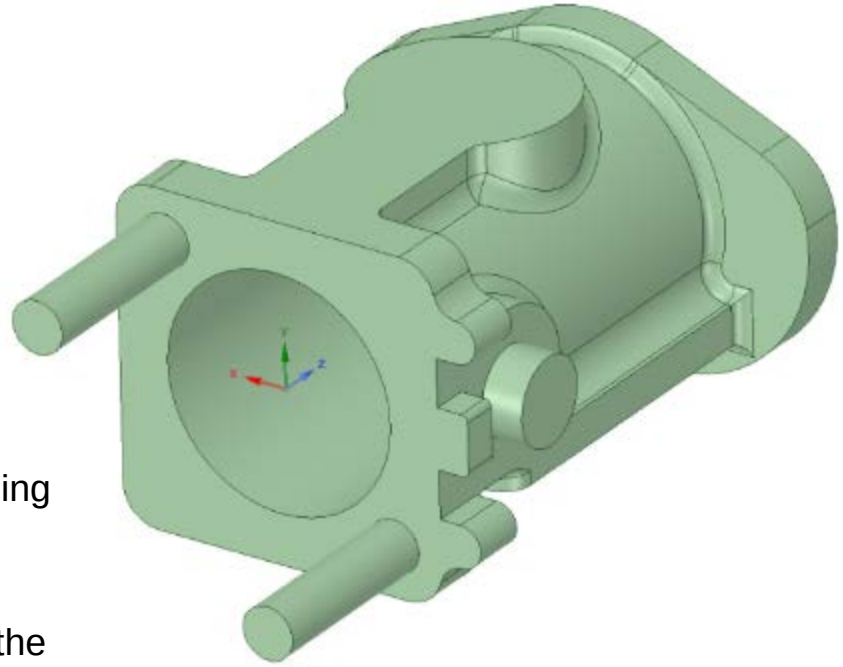

Casting Model with Initial Gating Design

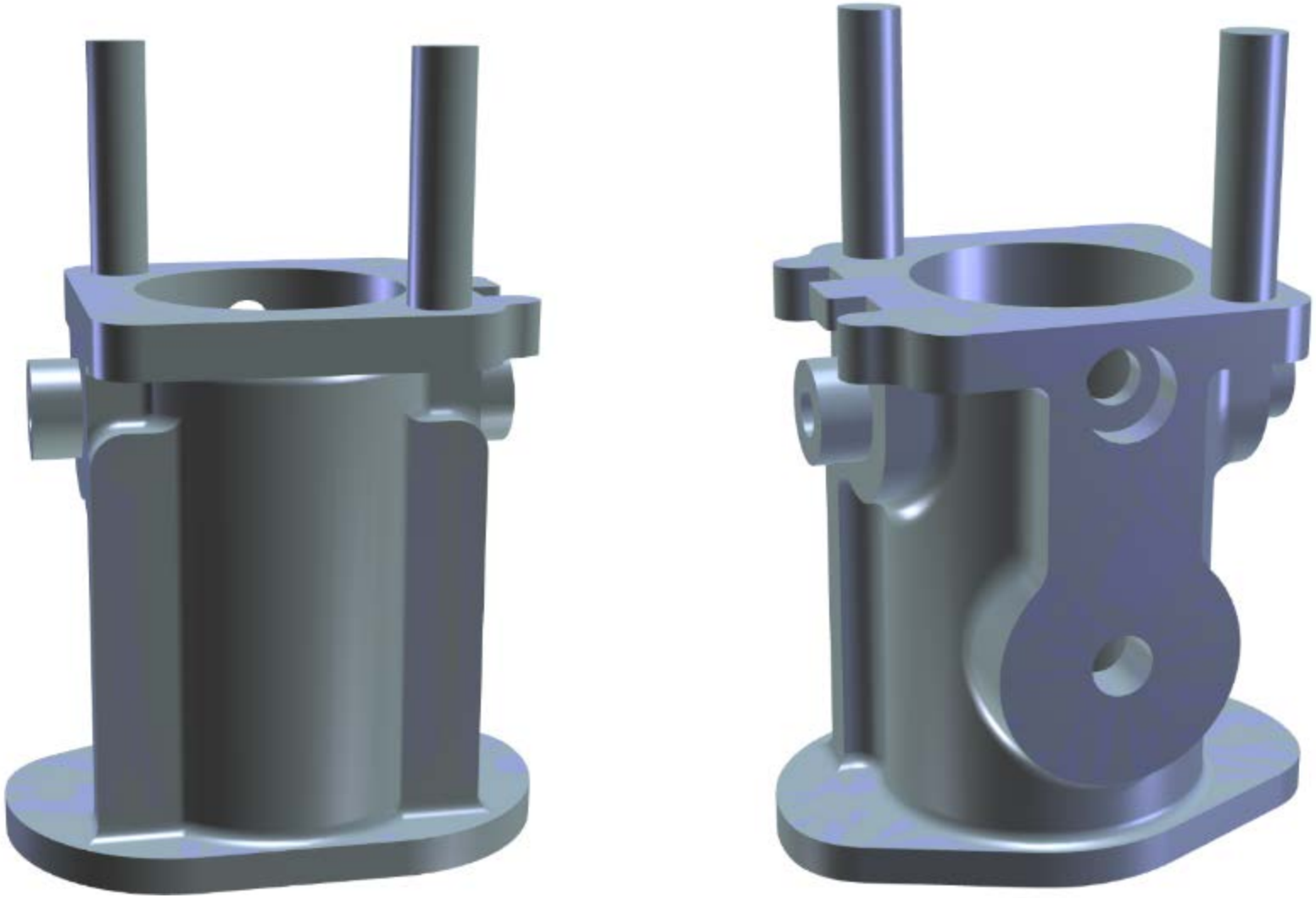

Evolution to 3D-Printed Mold

- **HTCI Decided to Take Advantage of 3D-Printed Molds**
- **Complete 3D-Printed Ceramic Mold Assembly**
  - **Pour Cup**
  - **Filter**
  - **Sprue/Manifold**
  - **Mold**

Provide Complete Mold Assembly Read-to-Pour

Second Iteration of Mold Assembly Design

Pour Cup

Filter

Sprue/
Manifold

Mold

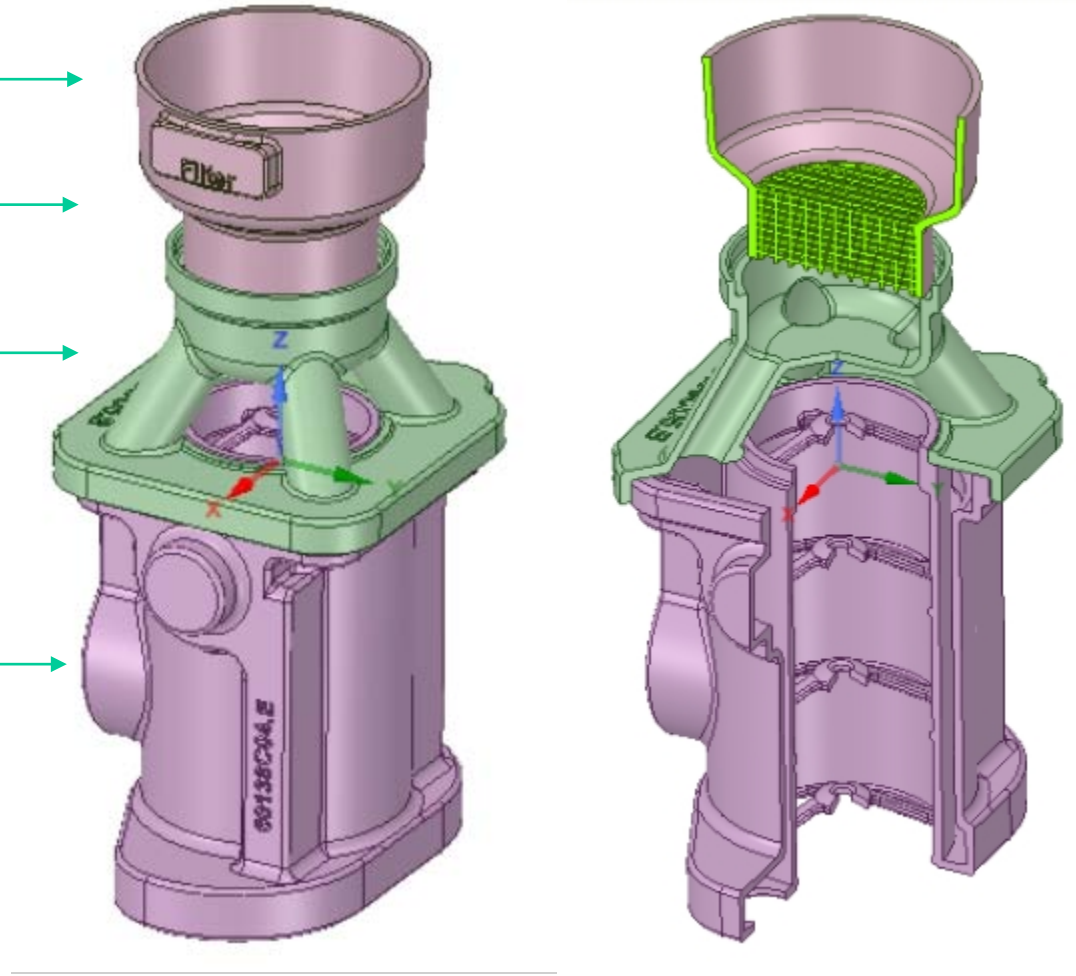

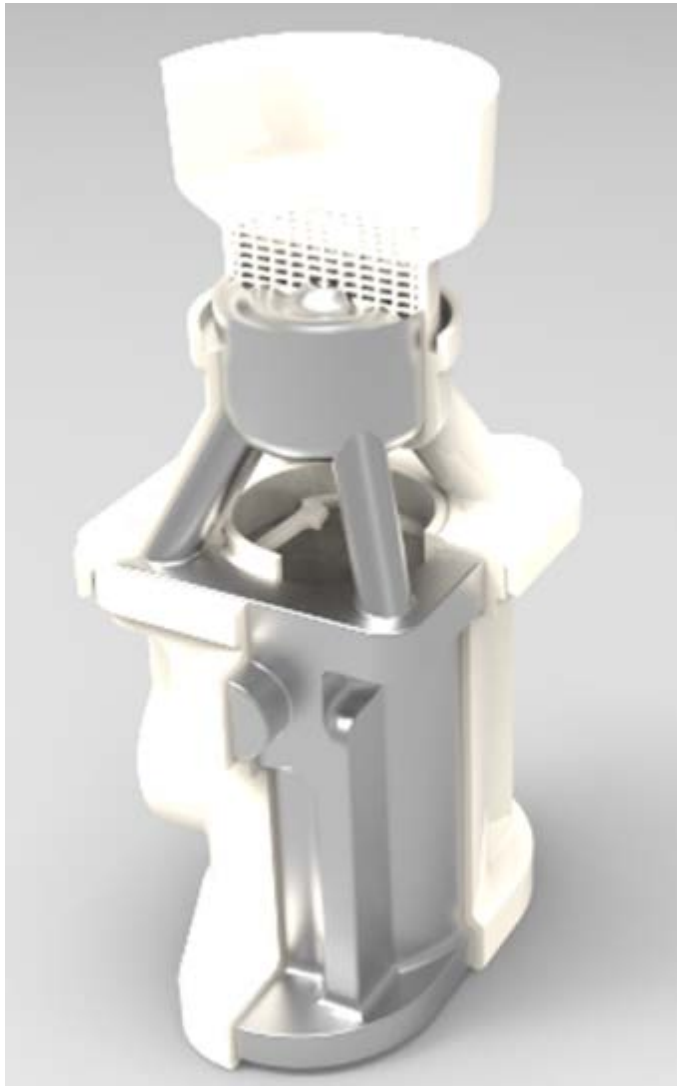

3D-Printed Mold Components

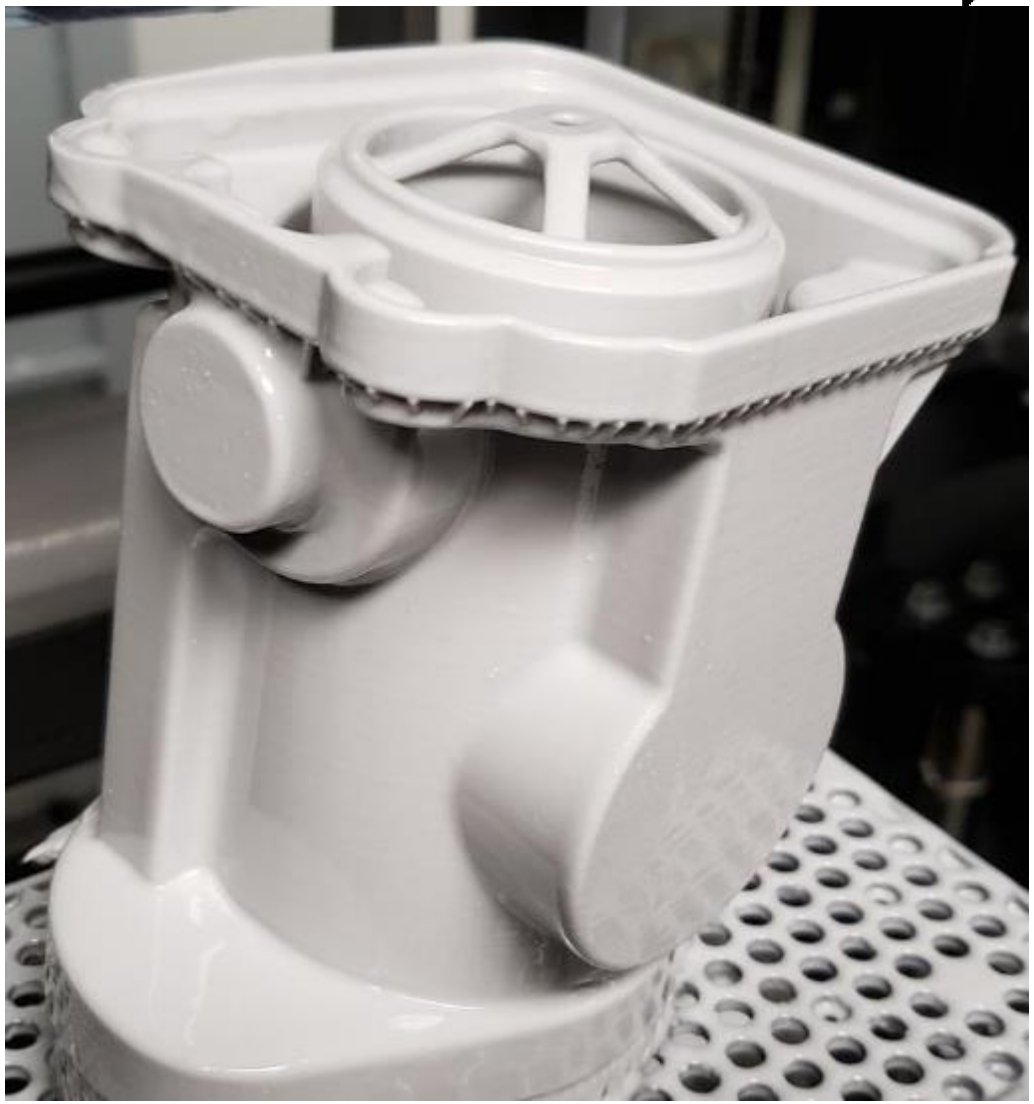

Interior View of 3D-Printed Mold

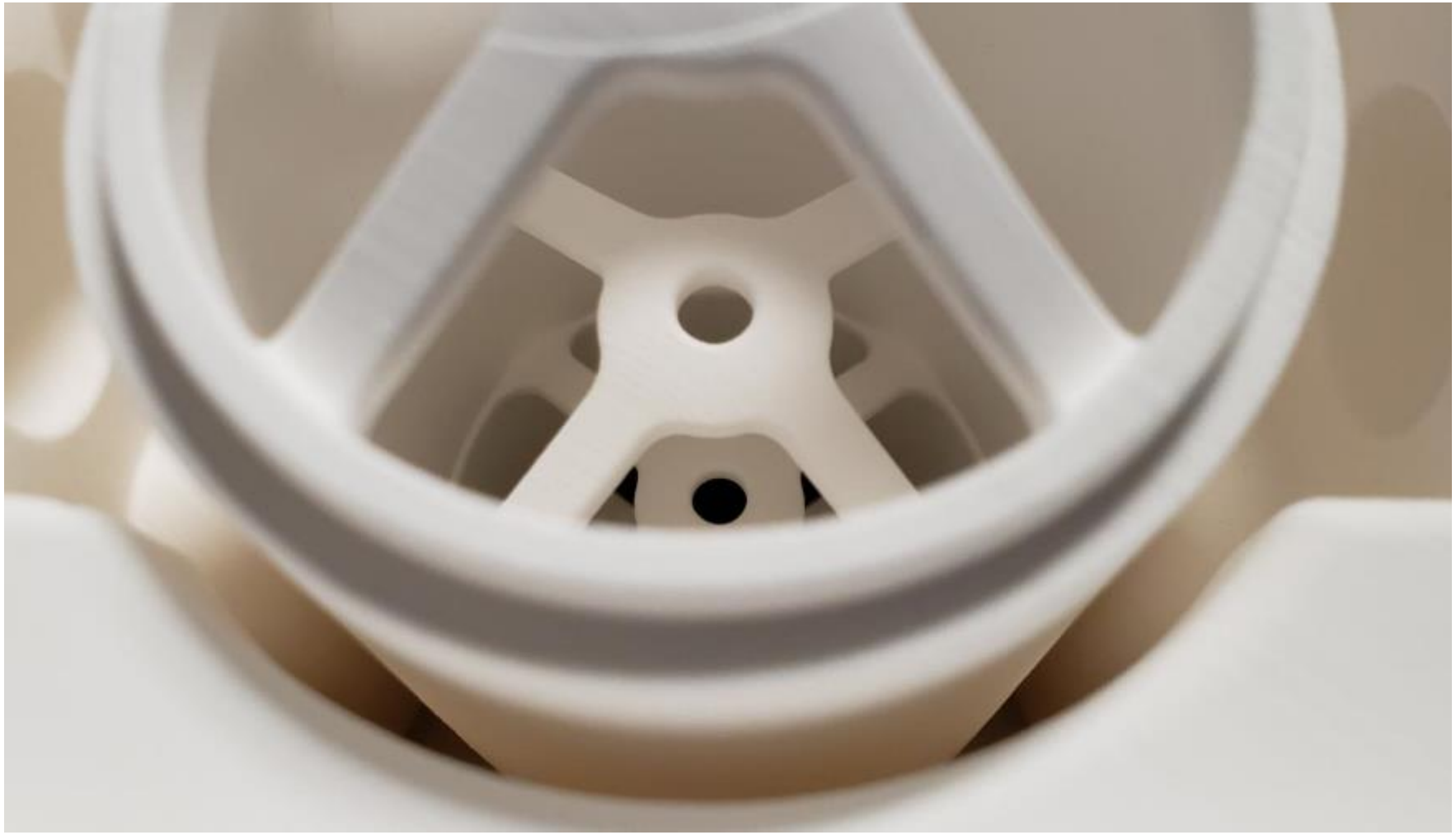

3D-Printed Pour Cup & Integral Filter

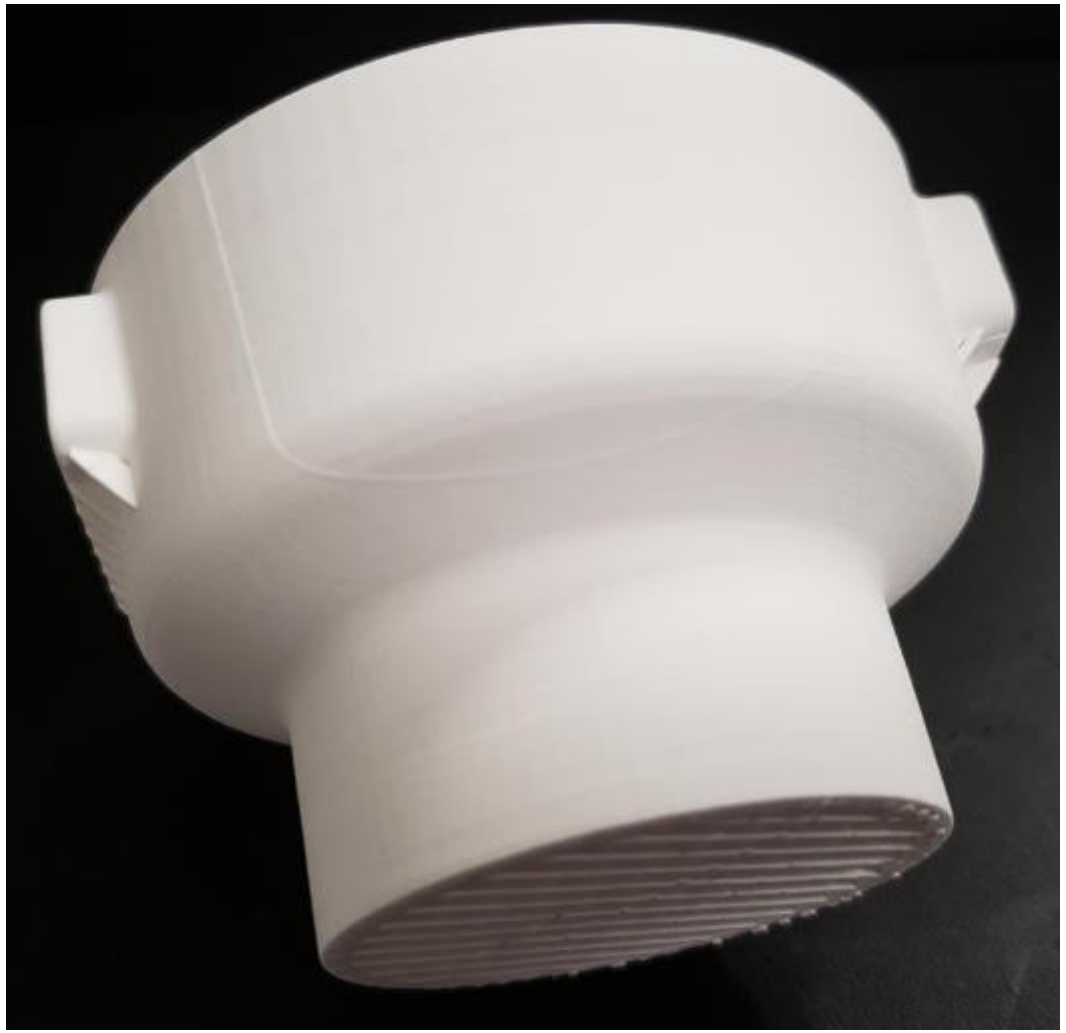

3D-Printed Ceramic Mold Components

Multiple Components Ready for Assembly

Aluminum from Pour Cup-Filter-Manifold

Pour cup

Filter

Sprue/
Manifold

Finished Castings

Redesign of 3D-Printed Mold

Flash Indications were drivers for modifications

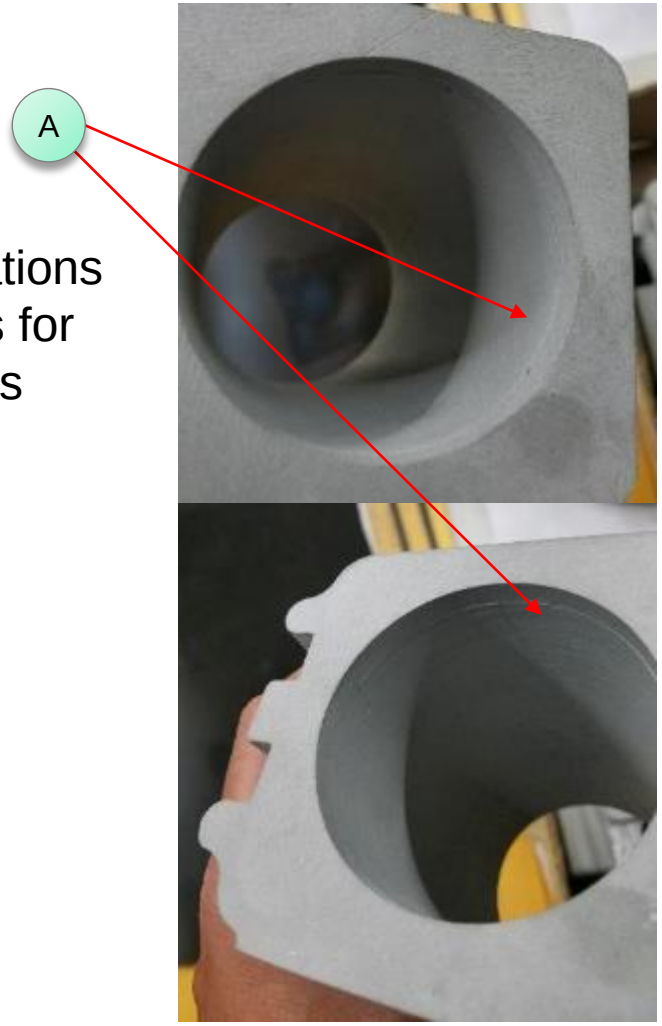

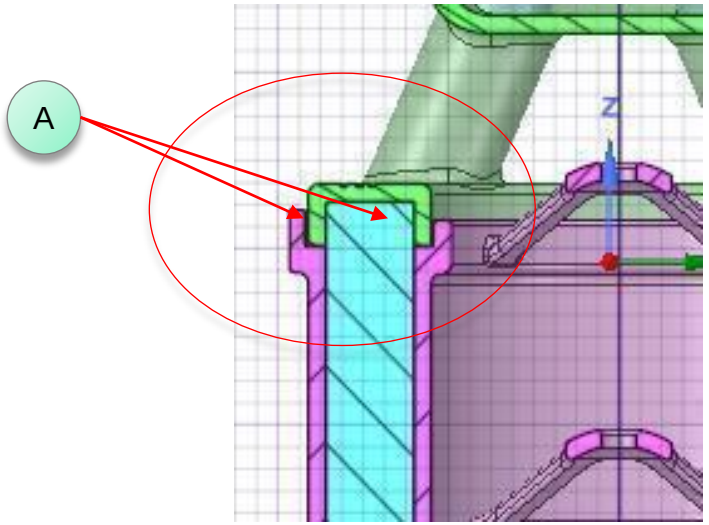

Original Design

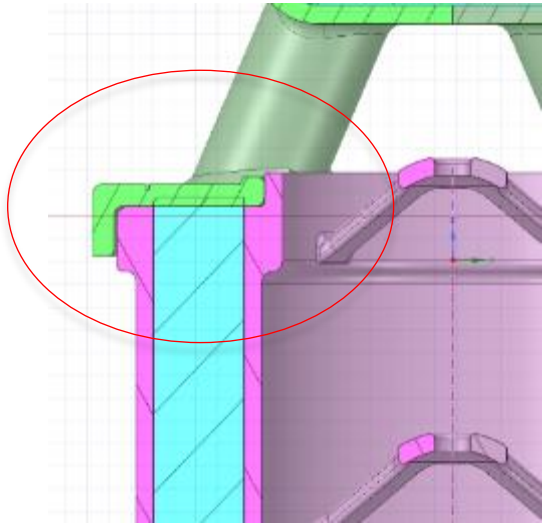

New Design

Summary and Q&A

Summary

- **3D-printed ceramic molds provide the means to improve yield, reduce lead time, and reduce tooling costs**
- **3D-printed ceramic molds enable production of more complex parts than possible with traditional methods**
- **The production of molds is becoming more capable and commonplace as a solution for investment casting**

For Further Information about 3D-Printed Ceramics

+1 937-586-7277
Info@PERFECT3D.com
www.PERFECT3D.com